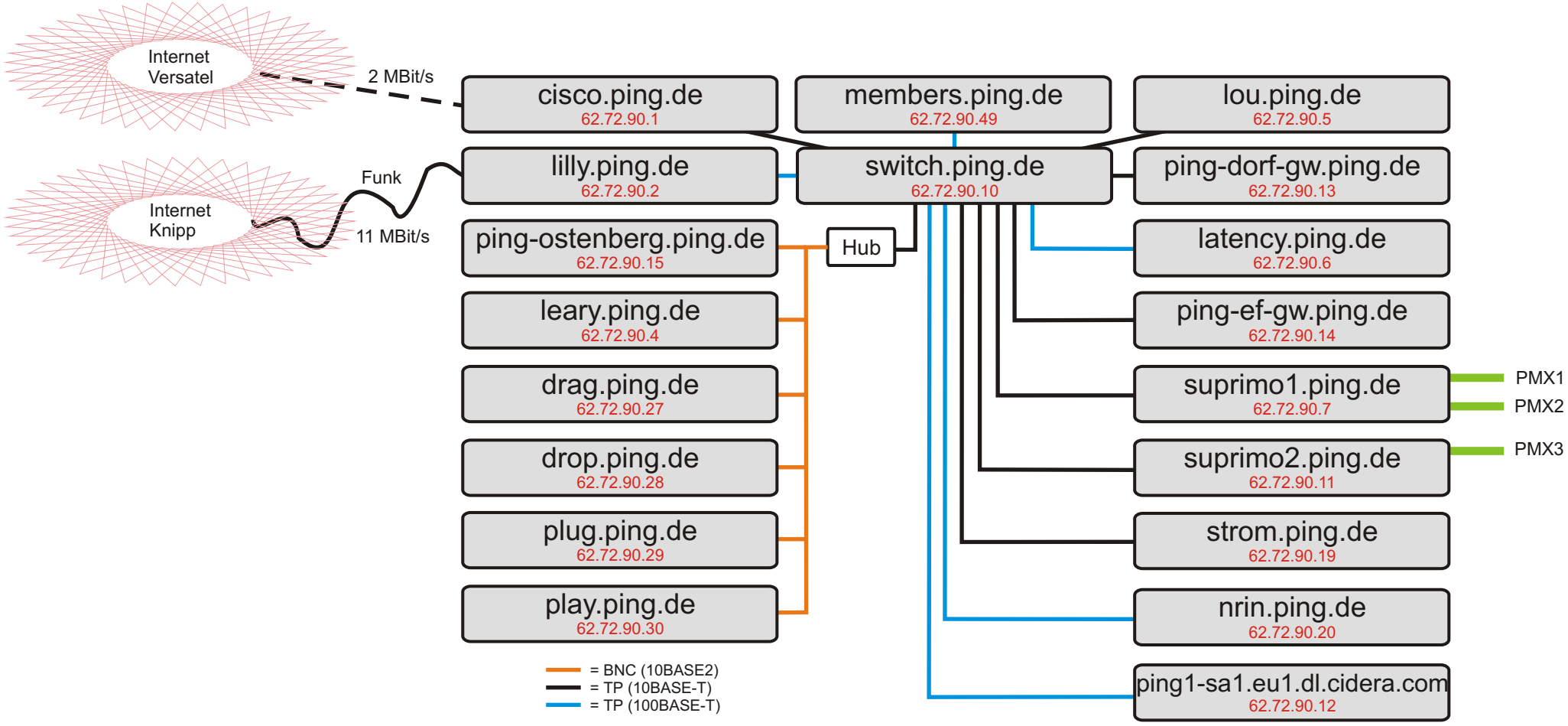
Internet
Versatel
2 MBit/s
Internet
Knipp
Funk
11 MBit/s
cisco.ping.de
62.72.90.1
members.ping.de
62.72.90.49
lou.ping.de
62.72.90.5
lilly.ping.de
62.72.90.2
switch.ping.de
62.72.90.10
ping-dorf-gw.ping.de
62.72.90.13
ping-ostenberg.ping.de
62.72.90.15
Hub
latency.ping.de
62.72.90.6
leary.ping.de
62.72.90.4
ping-ef-gw.ping.de
62.72.90.14
drag.ping.de
62.72.90.27
suprimo1.ping.de
62.72.90.7
PMX1
PMX2
drop.ping.de
62.72.90.28
suprimo2.ping.de
62.72.90.11
PMX3
plug.ping.de
62.72.90.29
strom.ping.de
62.72.90.19
play.ping.de
62.72.90.30
nrin.ping.de
62.72.90.20
= BNC (10BASE2)
= TP (10BASE-T)
= TP (100BASE-T)
ping1-sa1.eu1.dl.cidera.com
62.72.90.12